10" Pawn Decorative Bollard Product Specifications

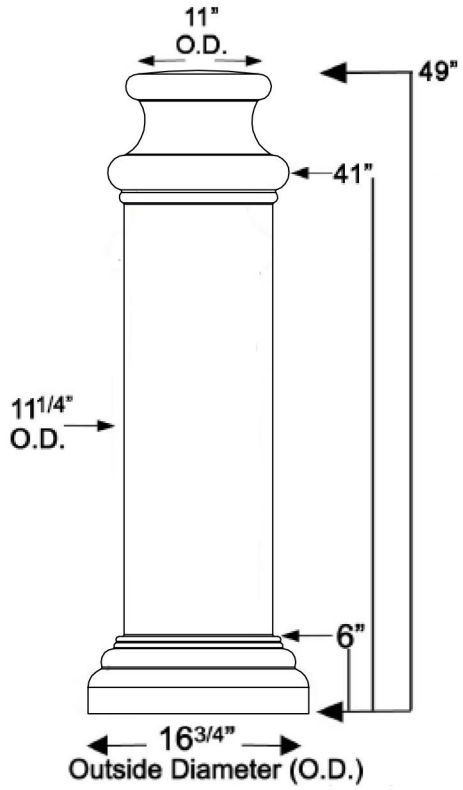

Steel Pipe ID = 10"
Steel Pipe OD = 10.75"
Ideal Sleeve ID = 10 7/8"

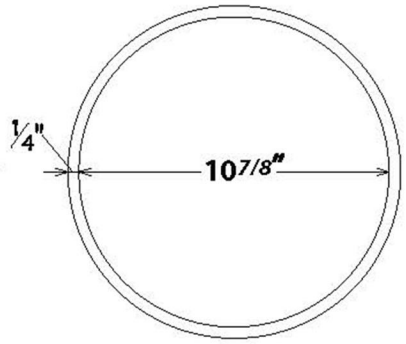

Cross Section of Sleeve

10" pipe up to 41" tall
8" pipe up to 41" tall
6" pipe up to 48" tall

Color: _____
Standard Colors: Yellow, Red, Black, Blue, Brown, Gray, Green, Orange, & White

Custom Color: Pantone®/Sherwin Williams® # _____
(if applicable)

Quantity: _____

Name: _____

Address: _____

City, State, Zip: _____

Phone: _____

Email: _____

NO.	REVISIONS	DATE	APPROVED

Signs & Safety

PROJECT	CUSTOMER	DESCRIPTION	DRAWN BY:	APPROVED BY:	DATE:
		10" Pawn Decorative Bollard	PROJECT NO: —		SCALE
			FINISH		DRAWING NO:
			MATERIAL		SHEET 1 OF 1

(262) 346-8451 I info@jpsignsandsafety.com I jpsignsandsafety.com